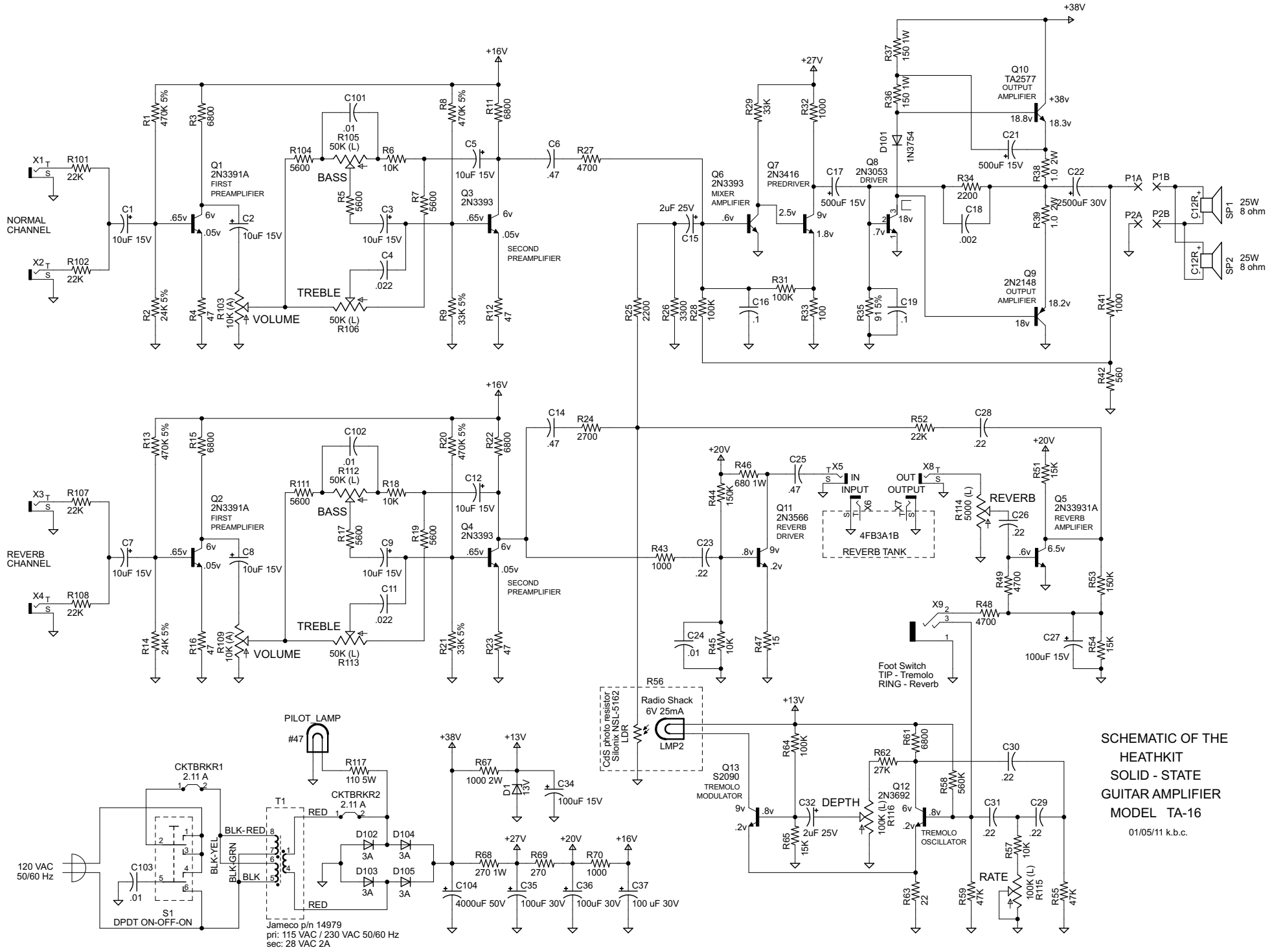
SCHEMATIC OF THE
HEATHKIT
SOLID - STATE
GUITAR AMPLIFIER
MODEL TA-16
01/05/11 k.b.c.
NORMAL CHANNEL
REVERB CHANNEL
Q1 2N3391A FIRST PREAMPLIFIER
Q2 2N3391A FIRST PREAMPLIFIER
Q3 2N3393 SECOND PREAMPLIFIER
Q4 2N3393 SECOND PREAMPLIFIER
Q6 2N3393 MIXER AMPLIFIER
Q7 2N3416 PREDRIVER
Q8 2N3053 DRIVER
Q9 2N2148 OUTPUT AMPLIFIER
Q10 TA2577 OUTPUT AMPLIFIER
Q11 2N3566 REVERB DRIVER
Q5 2N33931A REVERB AMPLIFIER
Q12 2N3692 TREMOLO OSCILLATOR
Q13 S2090 TREMOLO MODULATOR
BASS
TREBLE
VOLUME
REVERB
DEPTH
RATE
INPUT
OUTPUT
4FB3A1B
REVERB TANK
Foot Switch
TIP - Tremolo
RING - Reverb
PILOT LAMP
#47
CKTBRKR1 2.11 A
CKTBRKR2 2.11 A
120 VAC 50/60 Hz
S1 DPDT ON-OFF-ON
T1
Jameco p/n 14979
pri: 115 VAC / 230 VAC 50/60 Hz
sec: 28 VAC 2A
CdS photo resistor Silonix NSL-5162 LDR
Radio Shack 6V 25mA
LMP2
SP1 25W 8 ohm
SP2 25W 8 ohm
+38V
+27V
+20V
+16V
+13V